POWER SUPPLY

prepared by:

Gyro A. Madrona

Electronics Engineer

GRADING SYSTEM

FINAL GRADE

30%

PRELIM

30%

MIDTERM

40%

ENDTERM

TERM GRADE

100%

LABORATORY

PENALTY

0

ABSENT

3

45-min LATE

7 max

15-min LATE

TOPIC OUTLINE

Schematic Diagram

Footprint

PCB Design

Parts List

SCHEMATIC DIAGRAM

FOOTPRINT

Component	Footprint
Diode	1N4001
Connector	HDR**1X5**
Voltage Regulator	78/79XX**CT**
Capacitor 1000uF	CAPPR**750**-1600X3150
Capacitor 100uF	CAPPR**500**-1250X2500
Capacitor 10uF	CAPPR**350**-800X1150
Resistor 1K	RES**1300**-700X250

SCHEMATIC DIAGRAM

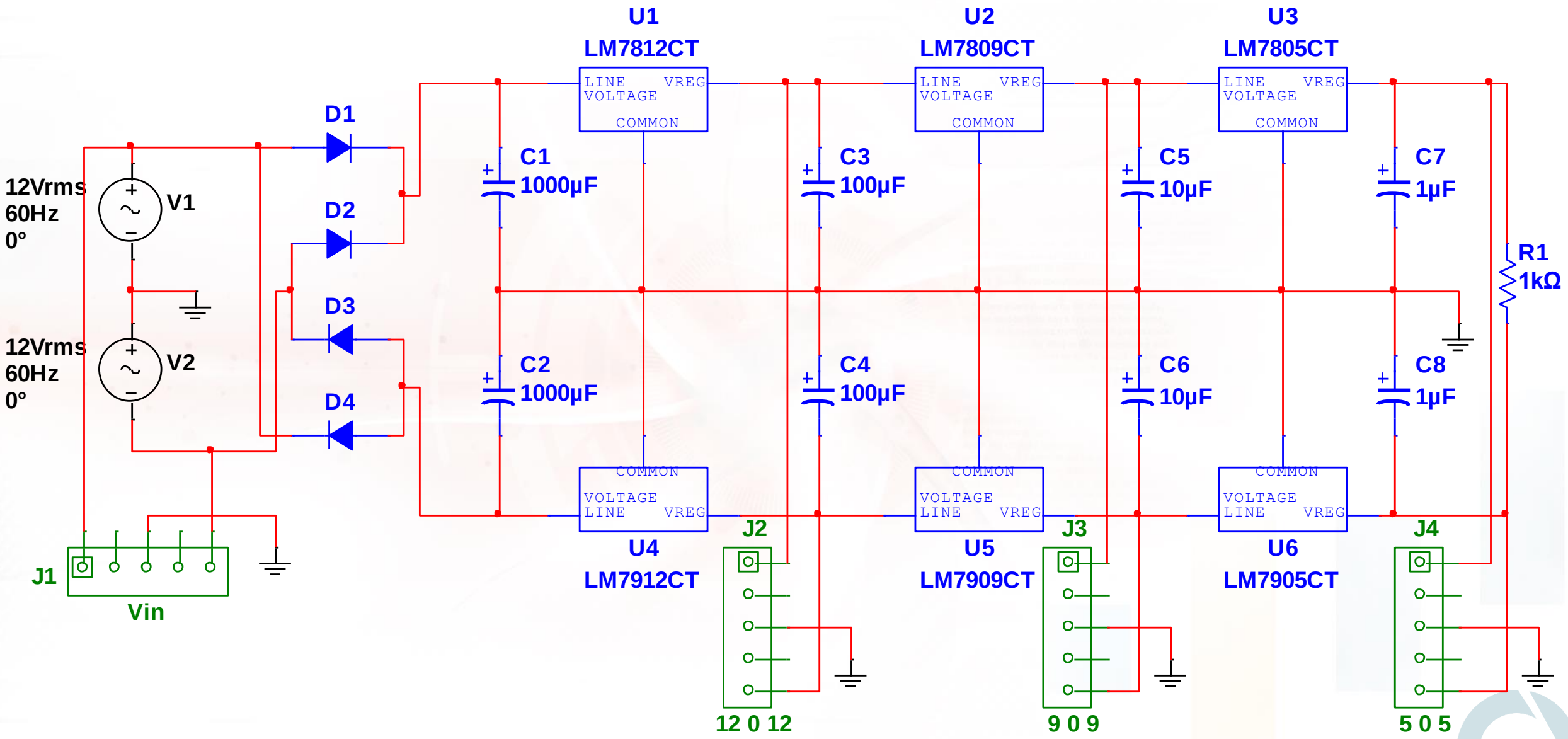

PCB DESIGN

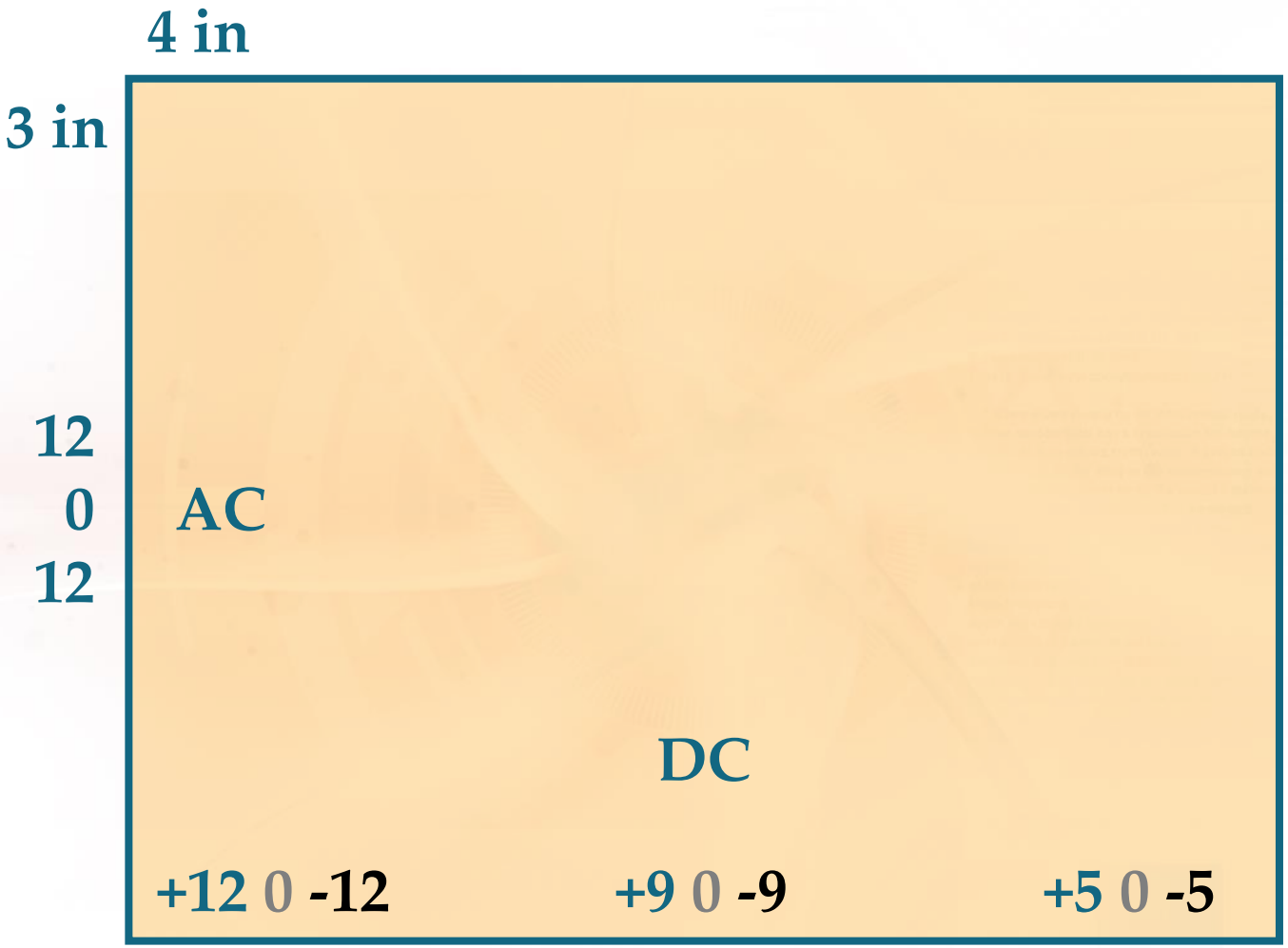

NO Copying of PCB Design!

PARTS LIST

Quantity	Description
4pcs	Diode 1N4001
1pc	Voltage Regulator 7812 + Heat Sink
1pc	Voltage Regulator 7809 + Heat Sink
1pc	Voltage Regulator 7805 + Heat Sink
1pc	Voltage Regulator 7912 + Heat Sink
1pc	Voltage Regulator 7909 + Heat Sink
1pc	Voltage Regulator 7905 + Heat Sink
2pcs	Electrolytic Capacitor 1000uF/16V
2pcs	Electrolytic Capacitor 100uF/16V
2pcs	Electrolytic Capacitor 10uF/50V
2pcs	Electrolytic Capacitor 1uF/50V

PARTS LIST

Quantity	Description
1pc	Presensitized PCB 6″x 4″
1pc	Resistor 1K,1/2W
9pcs	Terminal Strip
4pcs	Bolts and Nuts + Washer 1″ length, 1/8″ diameter
4pcs	Spacer
1bot	Ferric Chloride
1pc	Soldering Lead

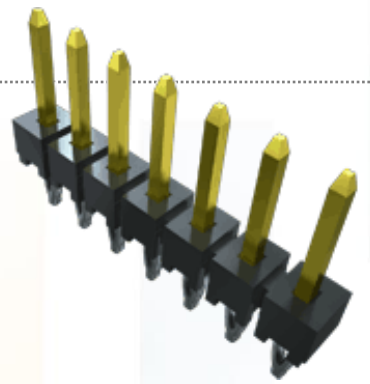

Terminal Strip

LABORATORY